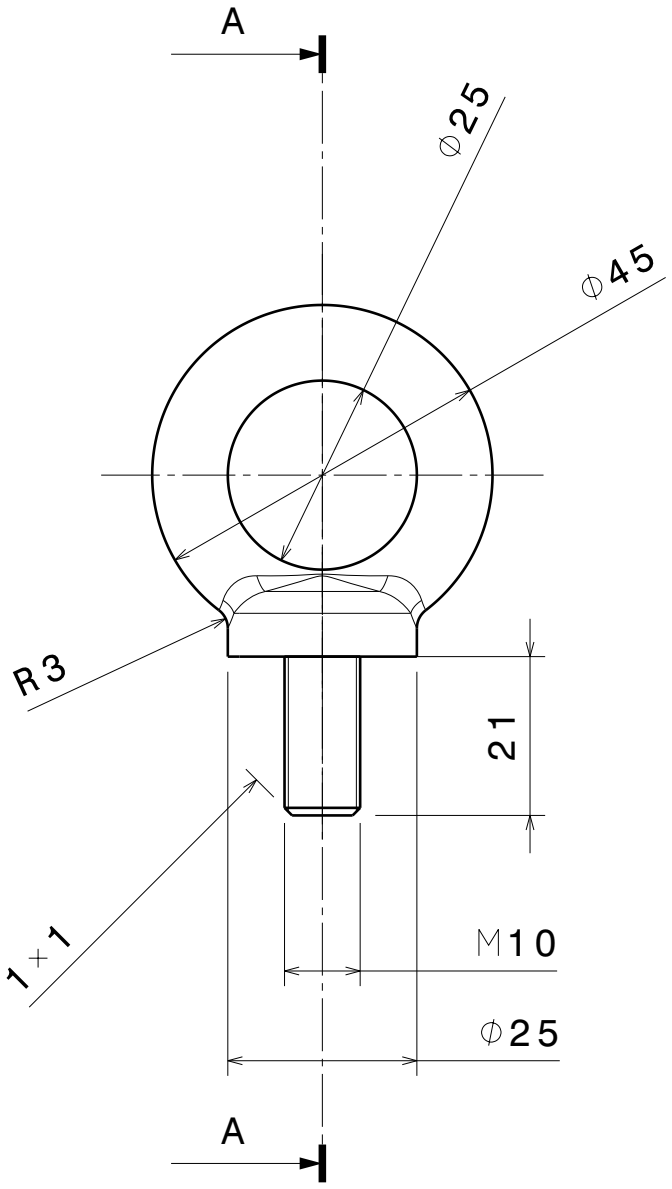

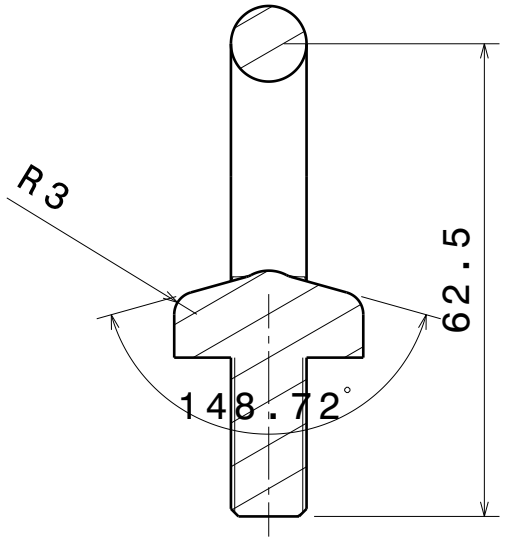

A-A

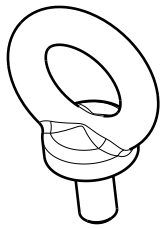

Scale 1:2

If not specified, tolerance of +/-0.1mm must be used.
Sharp edges must be removed.
This drawing cannot be reproduced or communicated without written agreement of Dr. A.Pulnikov.

Mod	Sh.	N. doc	Sign.	Date
Design		Pulnikov	17/06/2020	
Checked				
Control				
Depart.				
Control				
Appr.				

4A112M4-063-001

Eye bolt for housing

Let	Weight	Scale
	0.105	1:1
Sheet 1	Sheets 1	

Steel

Pulnikov EC

4A112M4-063-001

Use | Num. 3 | Sign. & date | Num. 2 | Num. 1 | Sign. & date | Num.