4A132M6-033-001

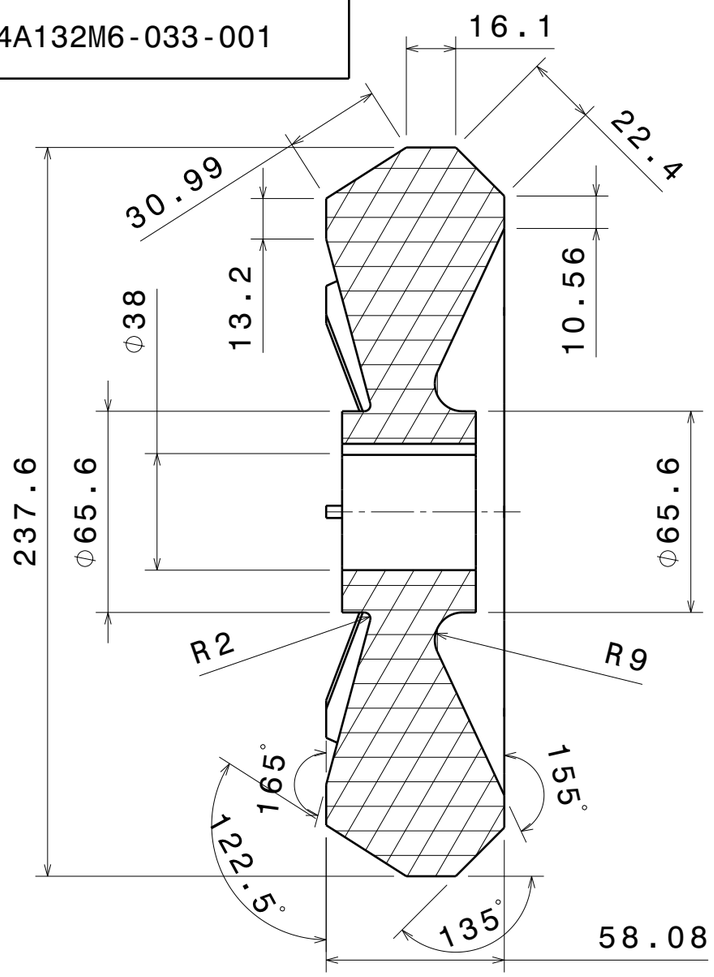

Section A-A

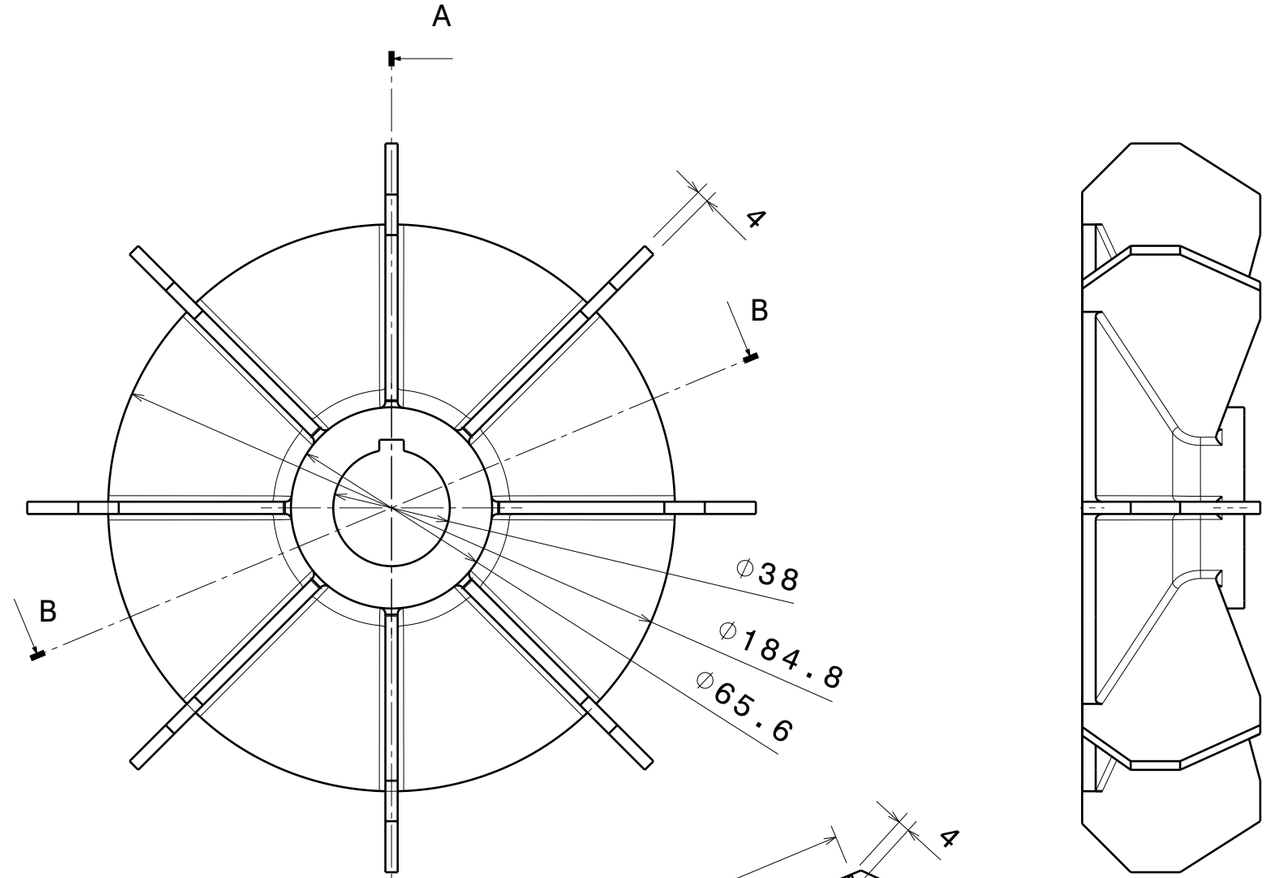

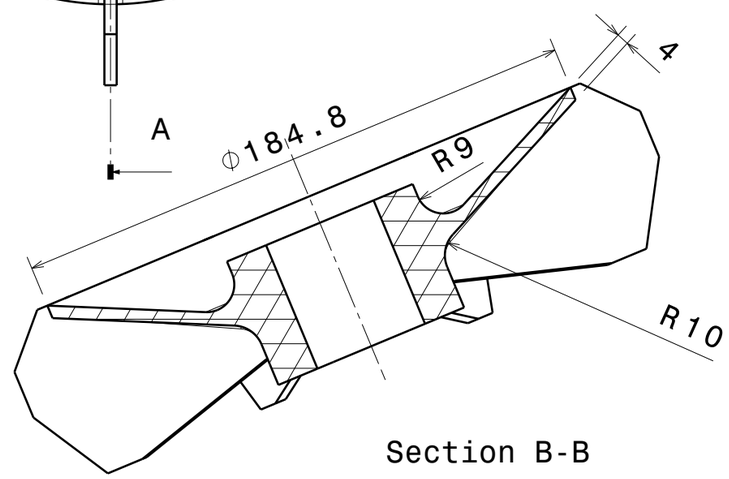

Section B-B

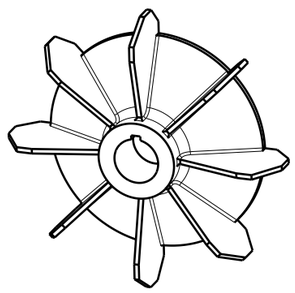

Scale 1:5

If not specified, tolerance of +/-0.1mm must be used.
Sharp edges must be removed.
This drawing cannot be reproduced or communicated without written agreement of Dr. A.Pulnikov.

Mod	Sh.	N. doc	Sign.	Date
Design		Pulnikov	17/06/2020	
Checked				
Control				
Depart.				
Control				
Appr.				

4A132M6-033-001

Fan

Let	Weight	Scale
	0.987	1:2

Sheet 1 | Sheets 1

Aluminum

Pulnikov EC

Use | Num. 3 | Sign. & date | Num. 2 | Num. 1 | Sign. & date | Num.